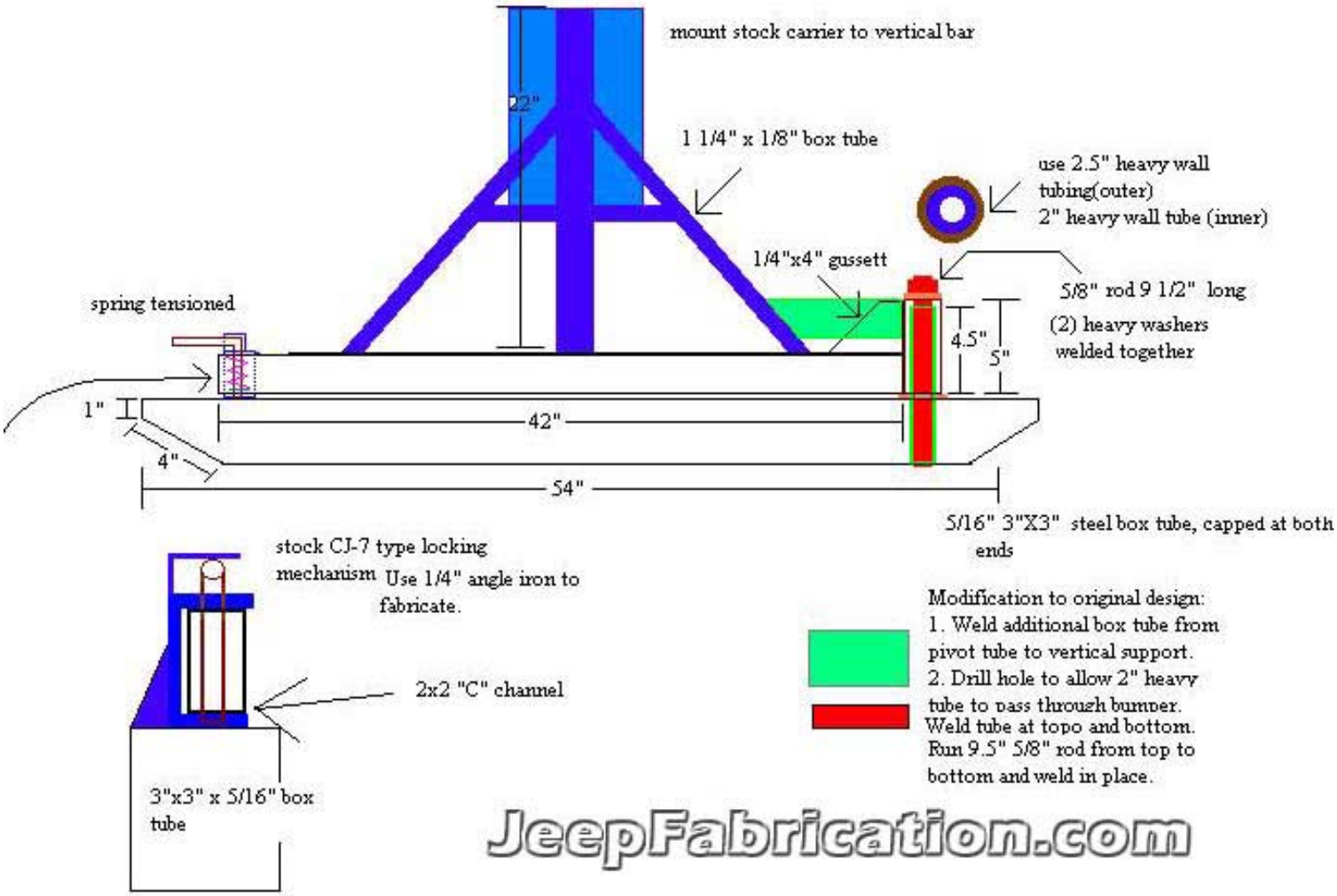

JeepFabrication.com