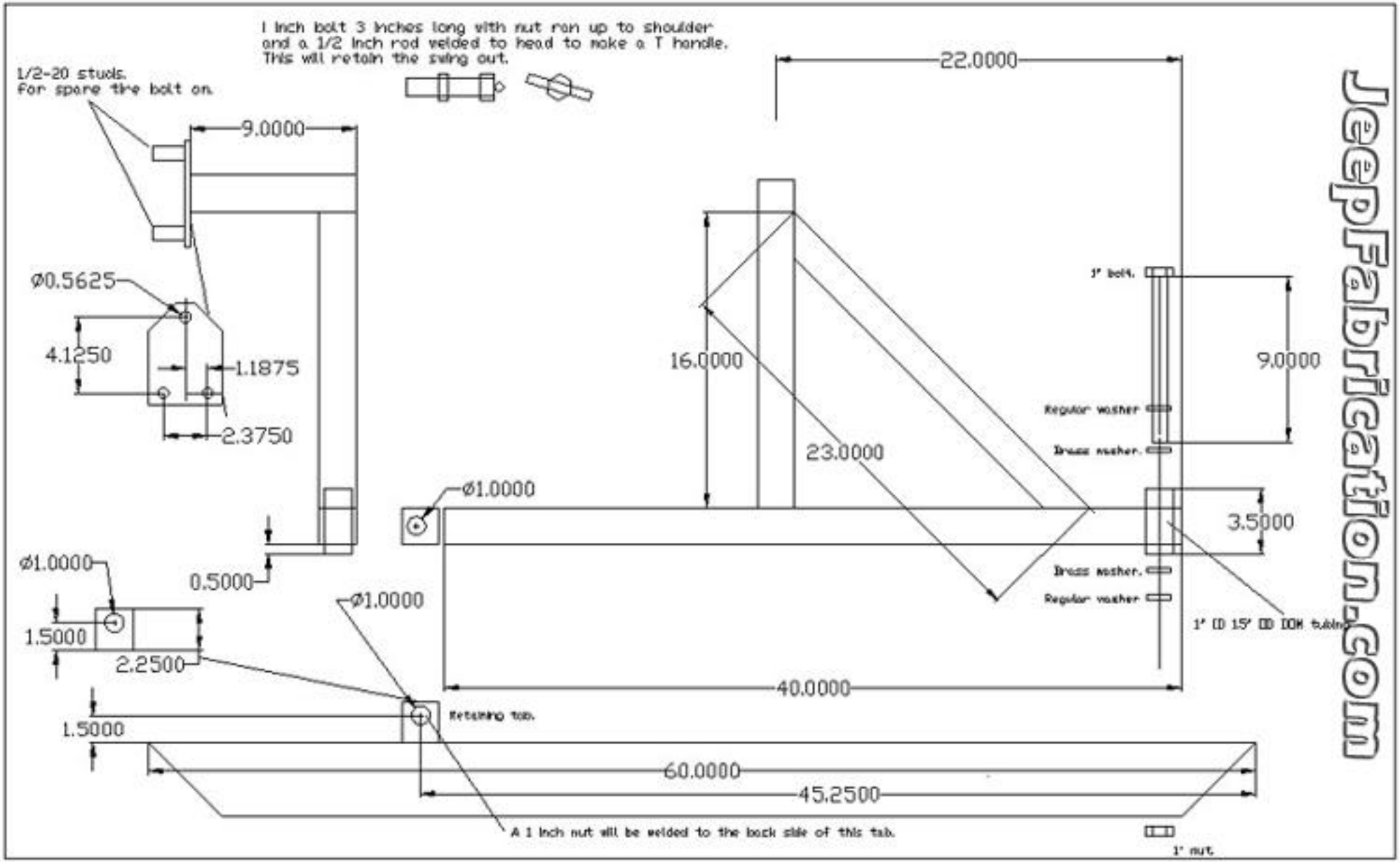
1 inch bolt 3 inches long with nut ran up to shoulder
and a 1/2 inch rod welded to head to make a T handle.
This will retain the swing out.
1/2-20 studs.
For spare tire bolt on.
9.0000
22.0000
Ø0.5625
4.1250
1.1875
2.3750
16.0000
23.0000
9.0000
1" bolt.
Regular washer
Brass washer.
Ø1.0000
3.5000
Brass washer.
Regular washer
1" ID 1.5" OD DOM tubing
Ø1.0000
0.5000
Ø1.0000
1.5000
2.2500
40.0000
Retaining tab.
1.5000
60.0000
45.2500
A 1 inch nut will be welded to the back side of this tab.
1" nut.
JeepFabrication.com